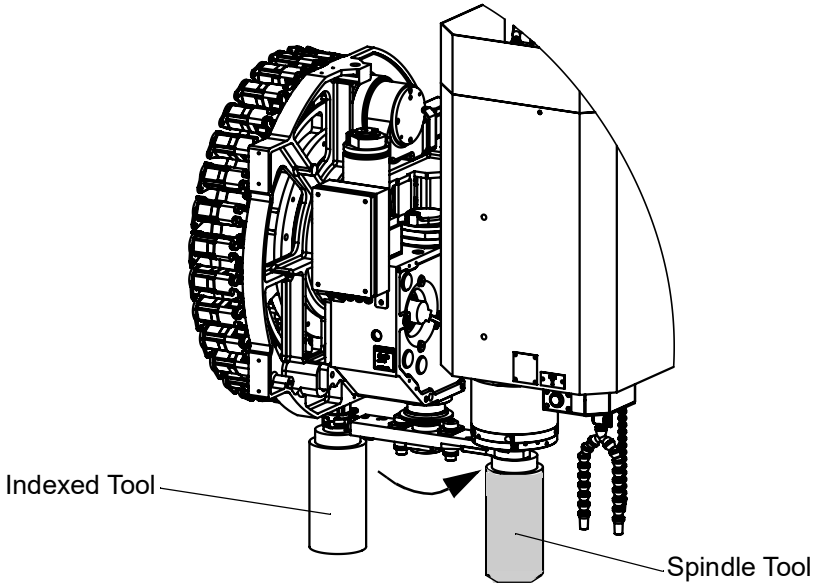

⑤ ATC arm rotates CCW direction and secures both spindle tool and indexed tool.

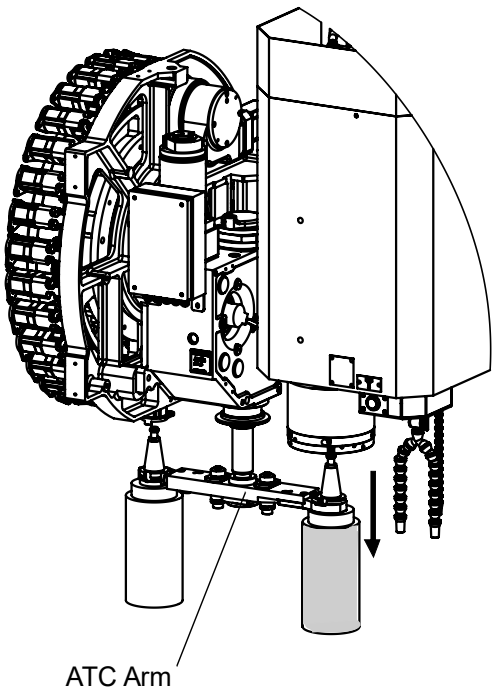

⑥ Spindle tool unclamp and ATC arm moves down.